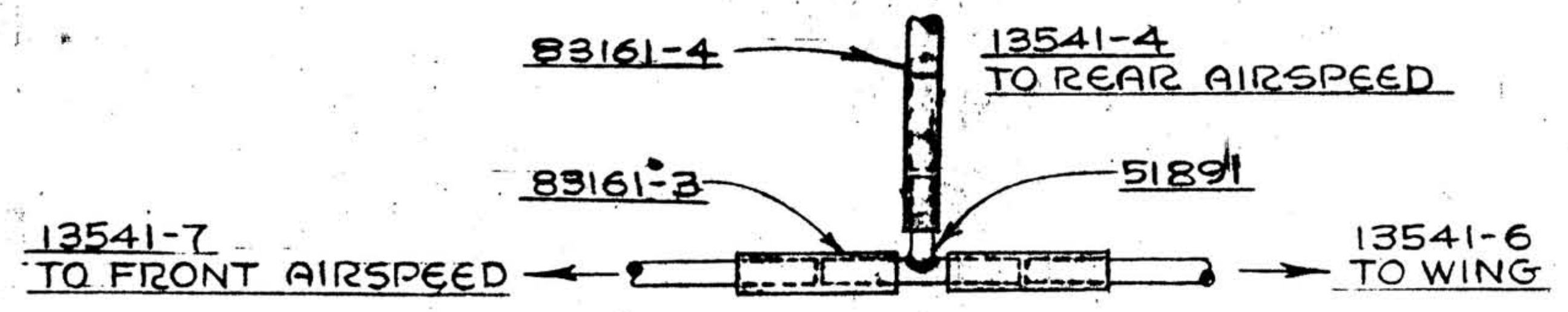
83161-4
13541-4 TO REAR AIRSPEED
83161-3
51891
13541-7 TO FRONT AIRSPEED
13541-6 TO WING

FIG. 3.
TOP VIEW of AIRSPEED TUBE TEE

40813	1	STABILIZER ADJ. MACH. INST.
41321	1	FAIRLEAD INST.
40712	1	
41671-2	1	CABLES
40123-6	1	
40123-5	1	
40123-2	2	
23772	1	SERIAL NUMBER INST.

SPOILER REAR PLACARD 83672
TO SPOILER CONTROL ARM
SEE FIG. 8
FUSELAGE FRAME & SUPERSTRUCTURE-22776
SPOILER FRONT PLACARD 83662
ENCLOSURE 51795
SERIAL NUMBER INST. 23772
D
FRONT INSTRUMENT PANEL 51782
COMPRESSION NUT & SLEEVE 2 REQ'D.
*6 TYPE PARKER SCR. EQUALLY SPACED-19 REQ.
TOW RELEASE MECHANISM 41972
3"
6"
SEE FIG. 5 FOR CABLE ATTACH.
FAIRLEAD SEE FIG. 4
42262
ENDS OF TUBING CLINCHED WITH SAFETY WIRE
TOW RELEASE RETURN SPRING 42151
REAR INSTRUMENT PANEL-51712
41922
SEE FIG. 3 FOR AIRSPEED TEE
TOW RELEASE ASSYS.-41512
REAR STABILIZER ADJUSTMENT CONTROL-42122
CONTROL STICK GRIPS 41221
BACK CUSHION 52792
BAGGAGE COMPARTMENT INST.-51963
FAIRLEAD INST. 40712
STABILIZER ADJUSTMENT MECH. INST. 40813
C
U.S.ARMY-TG-8
TAPE
51861 SEE FIG. 6
41671-3
IDLER PULLEY 42201
TAPE
41551
51921 OCCUPANCY PLACARD
CABLE GUIDE 40742
41671-2
FABRIC
23453
50982 & 50942 SEAT BACK & BOTTOM CANVAS LACED ON WITH NO. 4 MASON LINE
WIRING INST. 83273
BOTTOM CUSHION 52782
40123-6
40123-5
40123-2 2 REQ'D
FAIRLEAD INST. 41321
BELL CRANK-40663
REAR SEAT INST.-51953
B
SEE FIG. 7 FOR ATTACH. 22753
FRONT STABILIZER ADJUSTMENT CONTROL 41182
BACK CUSHION, FRONT & CENTER SEATS 52852
BOTTOM CUSHION FRONT & CENTER SEATS 52362
FRONT SEAT 51613
BRAKE COVER SEE FIG. 1
CENTER SEAT-51013
CONTROL STICKS & TORQUE TUBES-42093
AILERON CABLE PULLEY 41361 SEE FIG 2. FOR HOUSING
RUSCO BELT AE 300 D SB520 AE 300 D SB522 OR AE 300 D SB520 AE 305 D SB693
FLOORBOARDS & CONTROL PEDALS 42134
RUSCO SAFETY BELT ASSY. AE 300 D SB521 AE 300 D SB522 OR AE 300 D SB521 AE 305 D SB693 FRONT & CENTER

83273	1	WIRING INST.
AN380-2-2	4	COTTER PIN
AN310-3	3	NUT
AN3-5	1	BOLT
AN3-6	2	BOLT
83161-4	1	RUBBER TUBE
83161-3	2	RUBBER TUBE
	4	.032"×2" LONG BRASS SAFETY WIRE
41922	1	TOW RELEASE CONNECTOR ROD
42201	1	STAB. CONTROL IDLER PULLEY
51891	1	AIRSPEED TUBE TEE
*6	43	PARKER SCREWS
42151	1	TOW RELEASE RETURN SPRING INST.
51963	1	BAGGAGE COMPARTMENT INST.
13541-7	1	AIRSPEED TUBE-FRONT
13541-4	1	AIRSPEED TUBE-CENTER
13541-6	1	AIRSPEED TUBE-WING
41781	1	PULLEY
40081	1	SAFETY RING
40701	1	FAIRLEAD
81322-14	2	SPOILER CABLE PULLEY LINK
80002-31	1	SPOILER CABLE PULLEY CLAMP
41333	1	CONTROL CABLES INST.
40742	1	CABLE GUIDE INST.
	1	20'-0" *4 MASON LINE
42262	1	SPOILER CONTROL CABLE ASSY.
41551	1	TOW RELEASE LINK
41671-3	1	STAB. ADJUSTMENT CABLE-FRONT
60583-2	2	BRAKE COVER
50042	2	AILERON PULLEY HOUSING
41361	2	AILERON CABLE PULLEY INST.
41221	3	CONTROL STICK GRIPS
50982	2	CANVAS SEAT BACK
50942	2	CANVAS SEAT BOTTOM
40663	1	BELL CRANK INST.
42093	1	CONTROL STICKS & TORQUE TUBES
22776	1	FUS. FRAME & SUPERSTR.
42122	1	STABILIZER ADJUST. CONTROL
41512	3	TOW RELEASE CONTROL ASSYS. INST.
51712	1	INSTRUMENT PANEL INST.-REAR
51795	1	ENCLOSURE INST.
42134	1	CONTROL PEDALS & FLOORBOARDS INST.
	3	RUSCO BELT TYPE AE 305D SB693 OR RUSCO BELT TYPE AE 300D SB522
	2	RUSCO BELT TYPE AE 300D SB521
	1	RUSCO BELT TYPE AE 300D SB520
51953	1	SEAT INST.-REAR
51013	1	SEAT INST.-CENTER
51613	1	SEAT INST.-FRONT
51782	1	INSTRUMENT PANEL INST.-FRONT
41972	1	TOW RELEASE MECH. INST.
22753	1	NOSE COWL
PART NO.	NO. REQ.	NAME

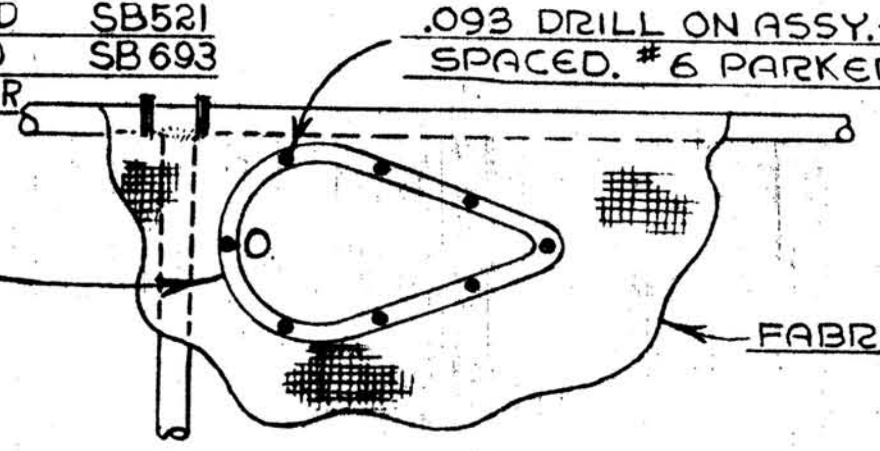
.093 DRILL ON ASSY.-EQUALLY SPACED. *6 PARKER SCR. (TYPE A)
60583-2
FABRIC

FIG. 1.
BOTTOM VIEW of BRAKE COVER
LEFT SHOWN, RIGHT IDENTICAL

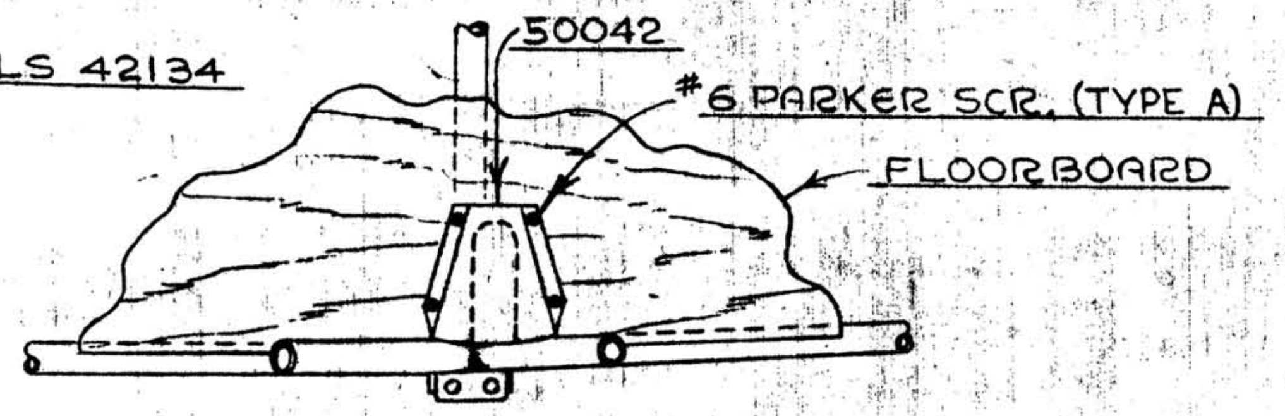
50042
*6 PARKER SCR. (TYPE A)
FLOORBOARD

FIG. 2.
TOP VIEW of AILERON CABLE PULLEY HOUSING
LEFT SHOWN, RIGHT IDENTICAL

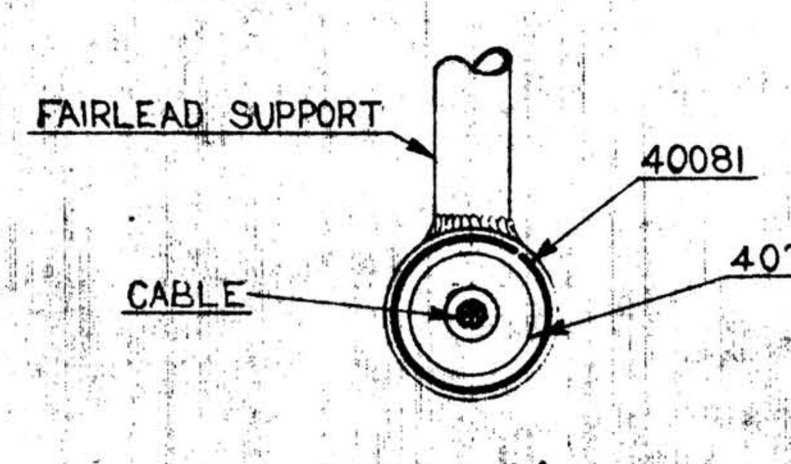
FAIRLEAD SUPPORT
40081
40701
CABLE

FIG. 4.
FULL SIZE

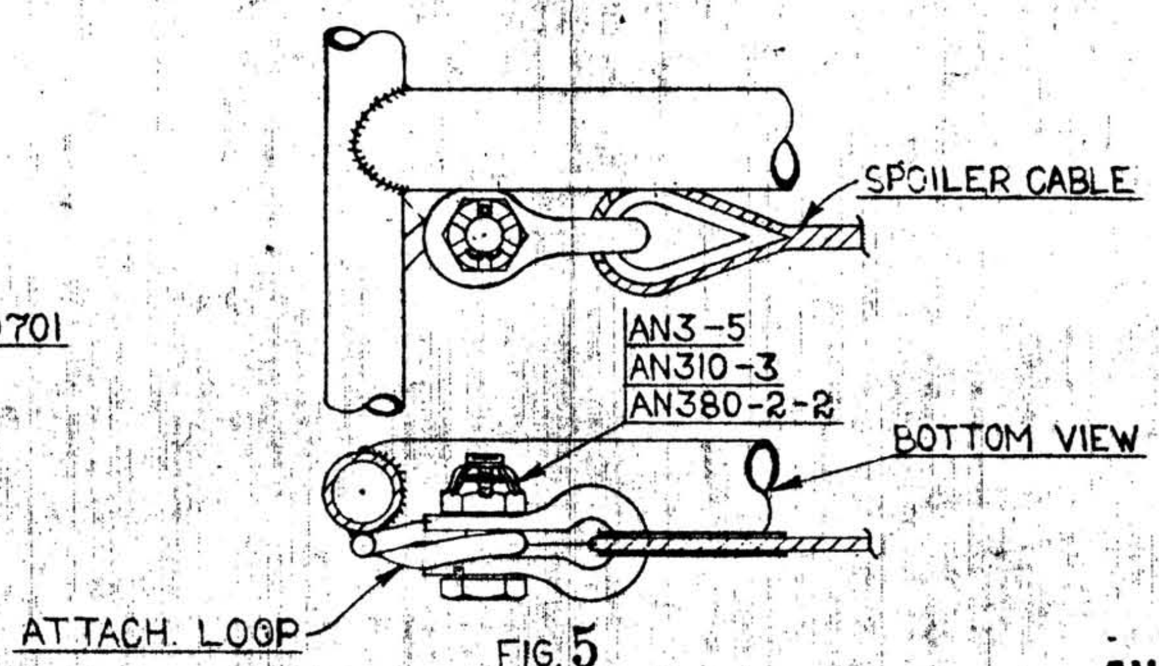
SPOILER CABLE
AN3-5
AN310-3
AN380-2-2
BOTTOM VIEW
ATTACH. LOOP

FIG. 5
FULL SIZE

AUG 13 1981

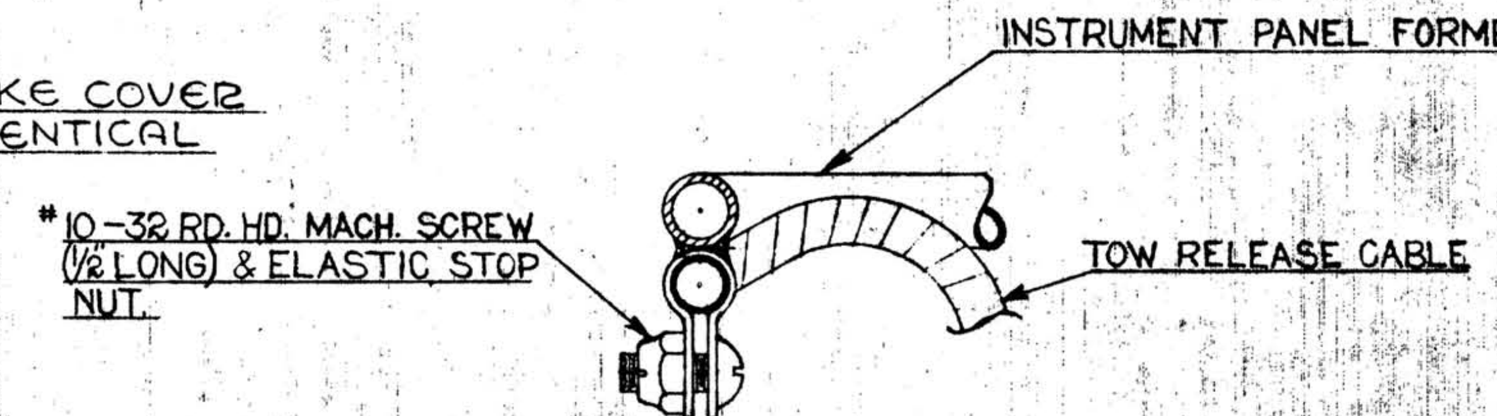
INSTRUMENT PANEL FORMER TUBE
*10-32 RD. HD. MACH. SCREW (1/2 LONG) & ELASTIC STOP NUT.
TOW RELEASE CABLE

FIG. 7

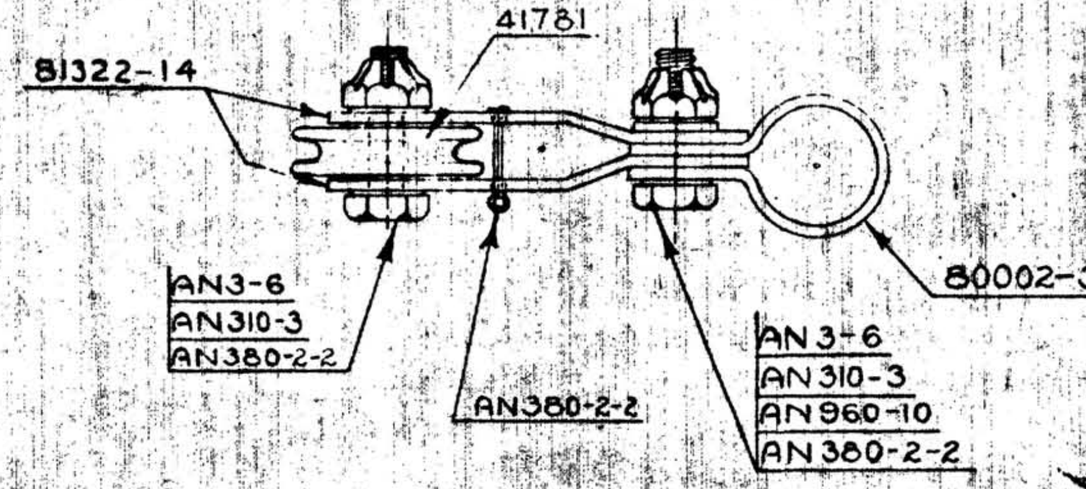
81322-14
41781
AN3-6
AN310-3
AN380-2-2
AN380-2-2
AN3-6
AN310-3
AN960-10
AN380-2-2
80002-31
A

FIG. 8
FULL SIZE

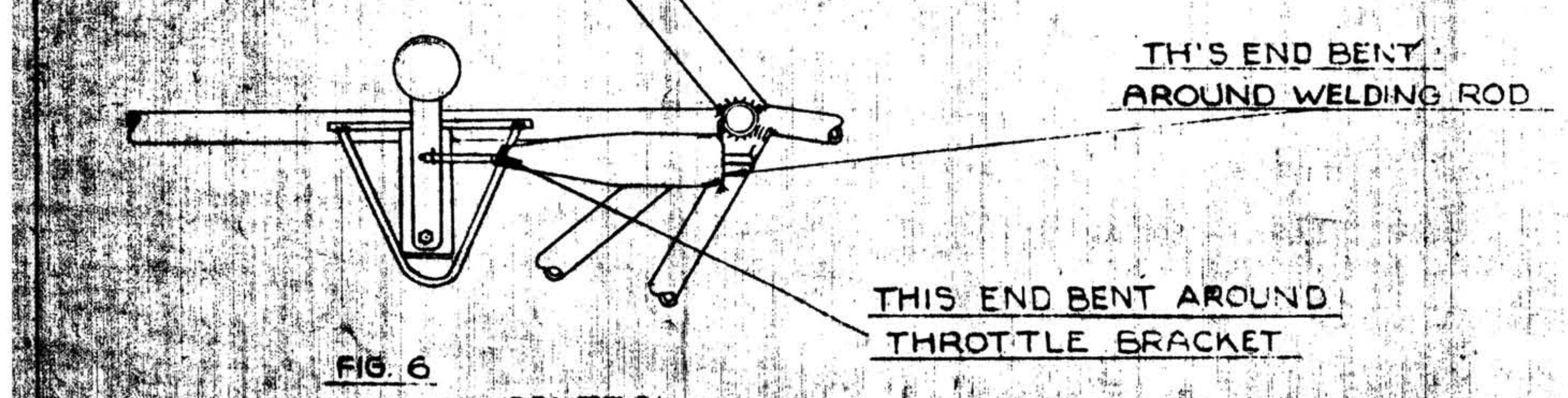
THIS END BENT AROUND WELDING ROD
THIS END BENT AROUND THROTTLE BRACKET

FIG. 6
RELEASE CONTROL
HOUSING INSTALLATION

NOTE: 1. ALL DRAWING NUMBERS ACCOMPANIED BY TITLE REFER TO INSTALLATION DRAWINGS.

2. FOR INSTALLATION OF ALL FAIRLEADS NOT NOTED SEE DWG. 40881

AN960-10	1	WASHER	
40881	6	FAIRLEAD INST.	
W60×3	2	3/16 WEATHERHEAD SLEEVE	
W61×3	2	3/16 WEATHERHEAD NUT	
51921	1	OCCUPANCY PLACARD INST.	
51861	1	CABLE HOUSING	
41182	1	STABILIZER ADJ. CONTROL	
*10-32	1	ELASTIC STOP NUT	
*10-32	1	1/2 LONG	MACH. SCREW
83672	1	REAR PLACARD INST.	
83662	1	FRONT PLACARD INST.	
52852	2	BACK CUSHION	
52792	1	BACK CUSHION	
52782	1	BOTTOM CUSHION	
52362	2	BOTTOM CUSHION	
23453	1	FUSELAGE FABRIC INST.	
	2	3/4"×6" LONG	FRICTION TAPE
PART NO.	NO. REQ'D.	SIZE	DESCRIPTION

LIMITS, SHOP PRACTICES AND FINISH, UNLESS OTHERWISE NOTED, TO BE IN ACCORDANCE WITH PIPER SPECIFICATIONS [illegible]

E	NO. REQ. FOR 41361 WAS 1	1-21-43		R.E.T.
D	23772 ADDED	12-16-42		R.R.F.
C	41321, 40712, 40813, 40881 ADDED	12-14-42		R.R.F.
B	CABLE REF. ADDED	[illegible]		R.P.T.
A	FIG. 8 ADDED	[illegible]		[illegible]
LET.	REVISION	DATE	[illegible]	[illegible]

TG-8	1	83233		
MODEL	PER SHIP	NEXT ASSY.	SUPERSEDES	SUPERSEDED BY

PIPER AIRCRAFT CORP.
LOCK HAVEN, PENNA.

SCALE 2" = 1 FT. & NOTED

FUSELAGE ASSY – COMPLETE

Stone	H.R.K.	
6-20-42	9-16-42	
DRAWN	CHECKED	APPROV.

23535